TEAR SHEET

Marisol Medium Single Sconce

Item # CD 2016GM-WG

Designer: Champalimaud



Height: 14.25"
Width: 9"
Extension: 4"
Backplate: 4.25" Round
Finishes: GM, PN
Glass Options: WG
Lightsource: Dedicated LED
Wattage: 6w (500lm)
Weight: 4 Pounds

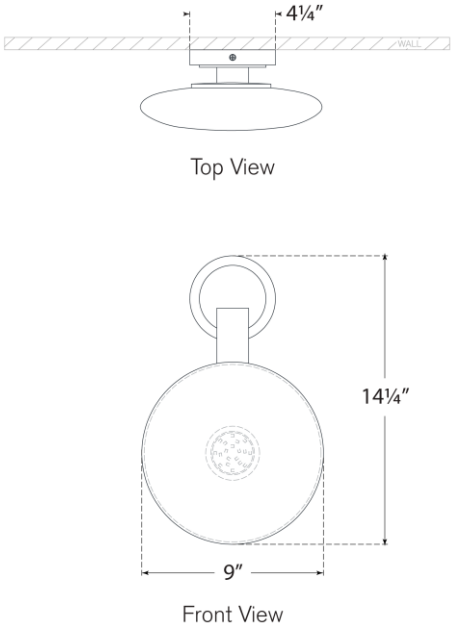

VISUAL COMFORT & CO.

DAMP LED 4