TEAR SHEET

Flore Double Library Wall Light

Item # CD 2020PN

Designer: Champalimaud

Height: 11.25" - 14.5"
Width: 5.25"
Extension: 14.75" - 26.5"
Backplate: 4.75" Round
Finishes: PN
Socket: E12 On/Off Toggle
Wattage: 6.5 LED B11
Weight: 4 Pounds



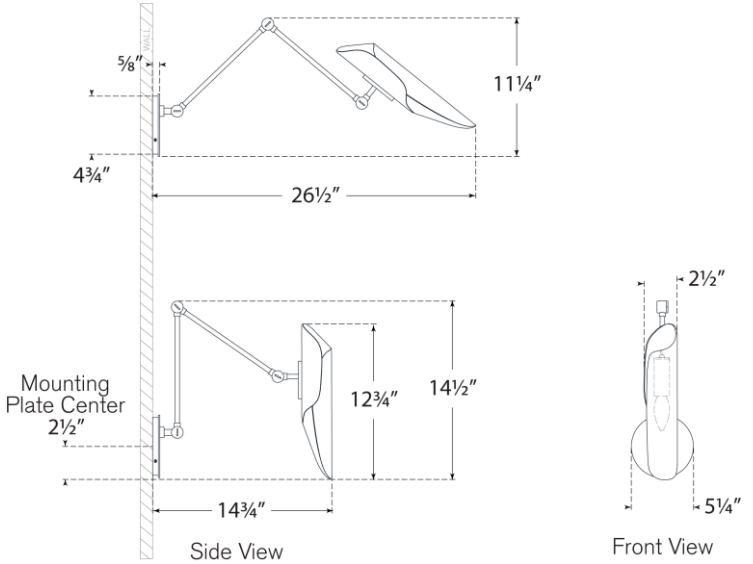

VISUAL COMFORT & CO.