TEAR SHEET



Flore Desk Lamp

Item # CD 3020PN

Designer: Champalimaud

Height: 23.75"
Width: 6"
Extension: 11.75" - 12.25"
Base: 6" Round
Finishes: PN, SB, SB/RB
Socket: E12 On/Off Toggle
Wattage: 6.5 LED B11
Weight: 7 Pounds

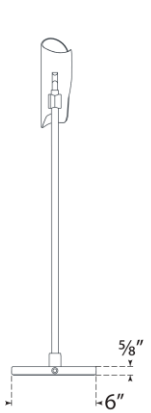

Back View

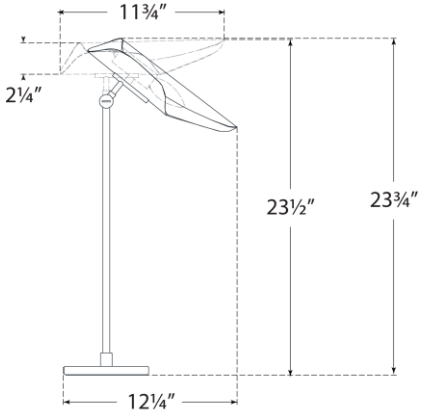

Side View

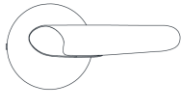
Top View

VISUAL COMFORT & CO.