TEAR SHEET

Fondant 8" Flush Mount

Item # CD 4004GM-WG

Designer: Champalimaud

Height: 4.5"
Width: 7.75"
Canopy: 4.5" Square
Finishes: GM, PN
Glass Options: WG
Lightsource: Dedicated LED
Wattage: 12w (1400lm)
Weight: 3 Pounds



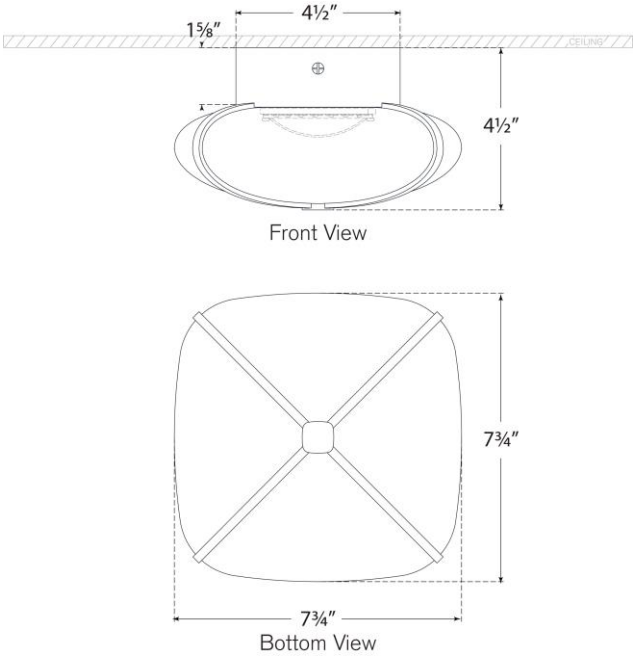

VISUAL COMFORT & CO.

DAMP LED 4