TEAR SHEET



Brindille XL Entry Chandelier

Item # CD 5020GM-WG

Designer: Champalimaud

O/A Height: 65.25"
Fixture Height: 23.25"
Min. Custom Height: 30.75"
Width: 38.75"
Canopy: 5.75" Round
Finishes: GM, PN, SB
Glass Options: WG
Lightsource: Dedicated LED
Wattage: 40w (3200lm)
Weight: 25 Pounds

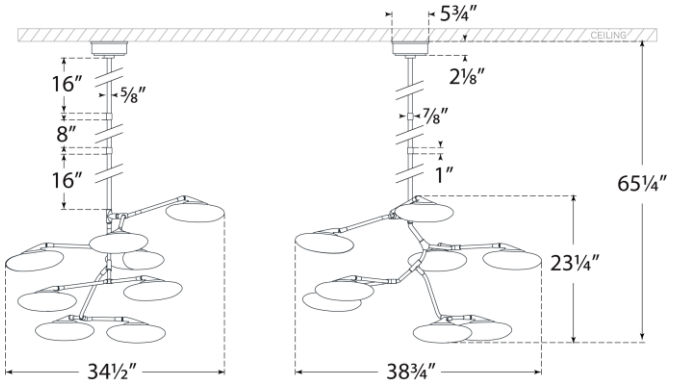

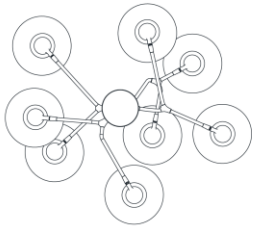

Top View

VISUAL COMFORT & CO.