TEAR SHEET



Antigua 29" Table Lamp

Item # CHA 8017NAB-L

Designer: Chapman & Myers

Height: 28.5"
Width: 20.5"
Base: 10.5" Round
Finishes: NAB
Shade Treatments: L
Shade Details: 8.75" x 20.5" x 13.5"
Socket: E26 Dimmer
Wattage: 15 LED A19
Weight: 12 Pounds
Note: 120V Configuration Only

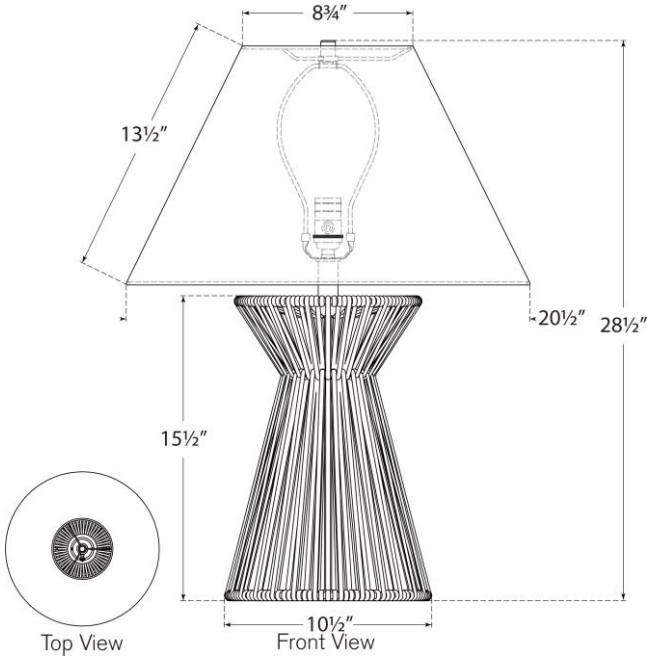

VISUAL COMFORT & CO.