TEAR SHEET



Connie 12" Cordless Accent Lamp

Item # CHA 8030AB-SP-CL

Designer: Chapman & Myers

Height: 12"
Width: 6.5"
Base: 4" Round
Finishes: AB
Shade Treatments: SP
Shade Details: 4" x 6.5" x 5"
Lightsource: Rechargeable LED w/ Touch Dimmer
Wattage: 1.7w (60 - 250lm)
Weight: 4 Pounds
Note: Rechargeable LED Lightsource and Charging Cable Included

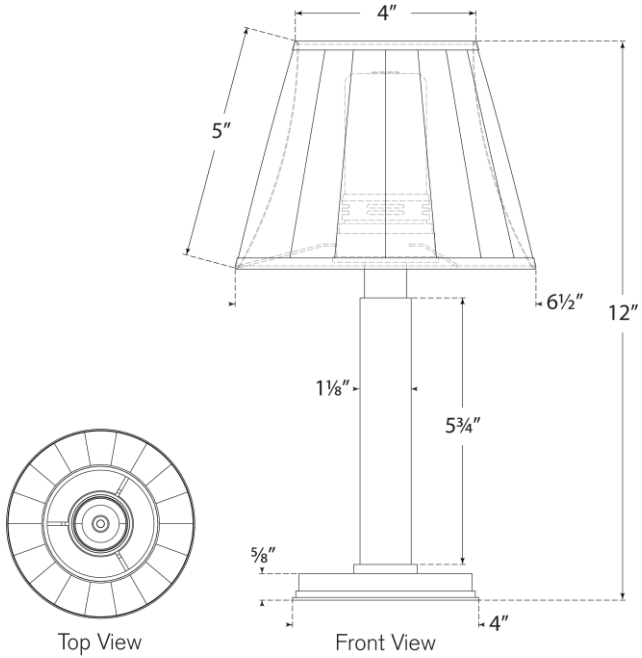

VISUAL COMFORT & CO.

DAMP LED