TEAR SHEET



Finley Large Balustrade Table Lamp

Item # CHA 8654IVO-L

Designer: Chapman & Myers

Height: 32"
Width: 17"
Base: 6.75" Square
Finishes: IVO
Shade Treatments: L
Shade Details: SH15.5/17x15.5/17x13LS
Socket: E26 Dimmer
Wattage: 100 A
Note: Reactive Ceramic Glazes Will Vary in Color and Texture
©EFC DESIGNS

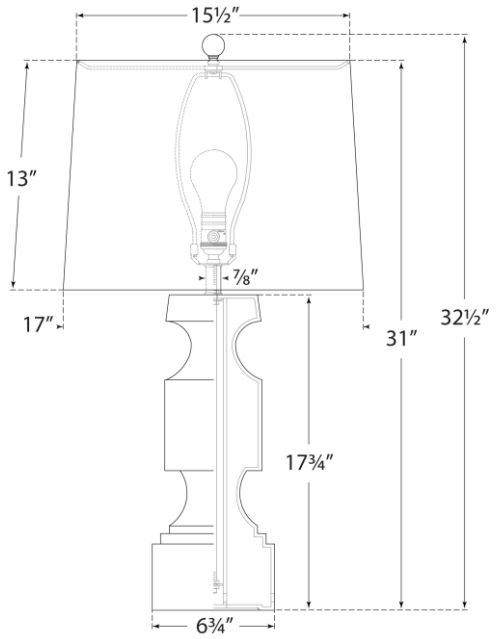

Front View

VISUAL COMFORT & CO.