TEAR SHEET



Temara 28" Table Lamp

Item # CHA 8684CSW-L

Designer: Chapman & Myers

Height: 28.25"
Width: 18.75"
Base: 5.75" Round
Finishes: CSG, CSW
Shade Treatments: L
Shade Details: 8.25" x 18.75" x 12.5"
Socket: E26 Dimmer
Wattage: 15 LED A19
Weight: 16 Pounds
Note: Reactive Ceramic Glazes Will Vary in Color and Texture

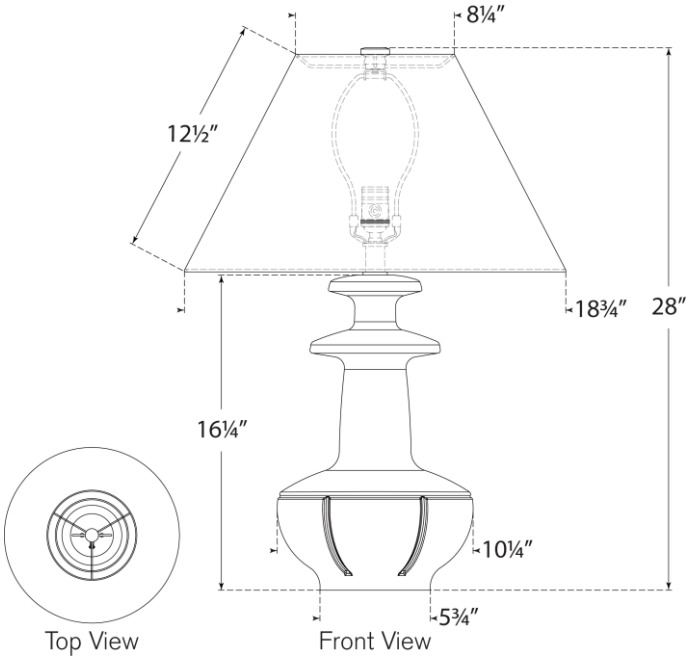

VISUAL COMFORT & CO.