TEAR SHEET



Anwen 23" Cordless Table Lamp

Item # CHA 8689CHT-NLP

Designer: Chapman & Myers

Height: 23"

Width: 20.5"

Base: 5.25" Round

Finishes: CHT, IND

Shade Treatments: NLP

Shade Details: 6.5" x 20.5" x 12.25"

Lightsource: Rechargeable LED w/ Touch Dimmer

Wattage: 4.6w (200 - 750lm)

Weight: 25 Pounds

Note: Rechargeable LED Lightsource and Charging Cable Included | Reactive Ceramic Glazes Will Vary in Color and Texture

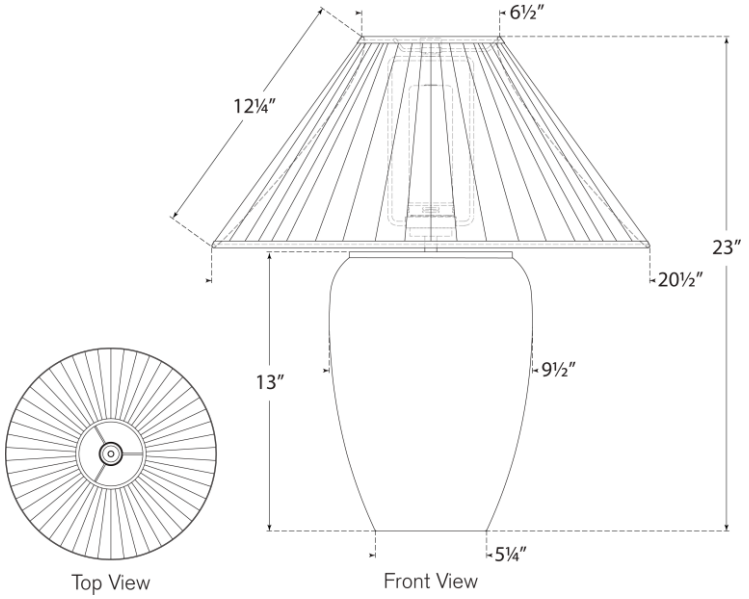

VISUAL COMFORT & CO.

DAMP LED