TEAR SHEET



Lucera Medium Table Lamp

Item # CHA 8692DM-L

Designer: Chapman & Myers

Height: 26"
Width: 19.25"
Base: 6.5" x 12.25" Rectangle
Finishes: DM, PRW
Shade Treatments: L
Shade Details: 17" x 19.25" x 11.5" Rectangle
Socket: E26 Dimmer
Wattage: 15 LED A19
Weight: 15 Pounds
Note: Reactive Ceramic Glazes Will Vary in Color and Texture

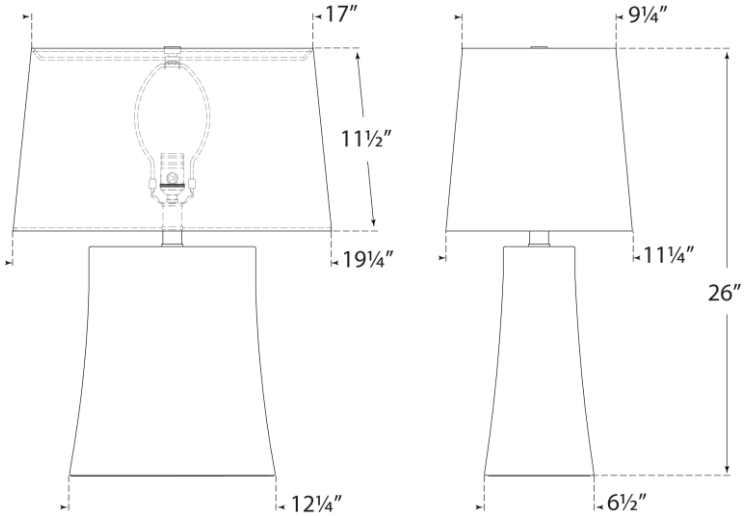

Front View

Side View

VISUAL COMFORT & CO.