TEAR SHEET

Darlana Medium Double Cage Lantern

Item # CHC 2178GI

Designer: Chapman & Myers

Height: 24.5"
Width: 17"
Canopy: 6" Round
Finishes: AI, GI, PN
Socket: 3 - E12 Candelabra
Wattage: 3 - 60 C11
Weight: 14 Pounds
©EFC DESIGNS



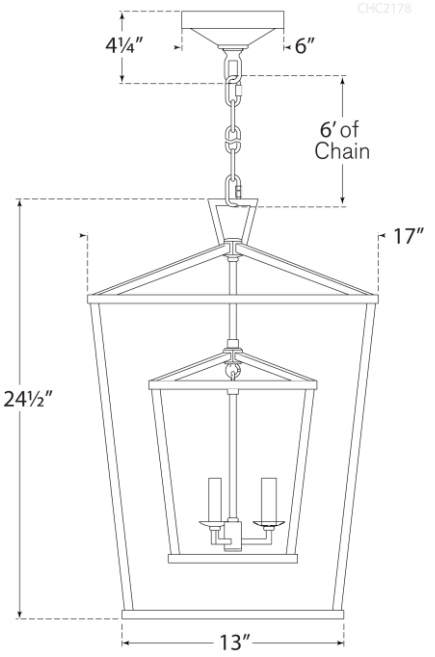

VISUAL COMFORT & CO.