TEAR SHEET

Callan 8" Flush Mount

Item # CHC 4040AB-WG

Designer: Chapman & Myers



Height: 9.5"
Width: 8"
Canopy: 7.75" Round
Finishes: AB, BZ, PN
Glass Options: WG
Socket: E26 Keyless
Wattage: 15 LED A19
Weight: 8 Pounds
Note: 120V Configuration Only

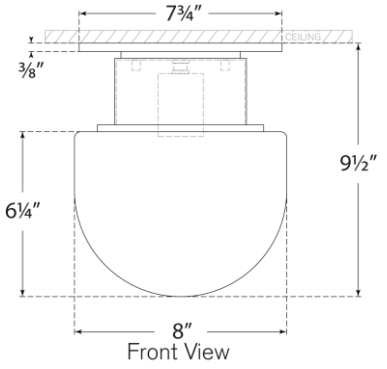

Front View

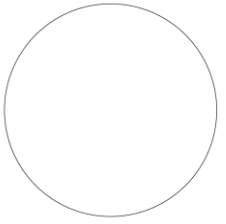
Bottom View

VISUAL COMFORT & CO.