TEAR SHEET

Nolan 9" Flush Mount

Item # CHC 4046AB-WG

Designer: Chapman & Myers



Height: 11"
Width: 9"
Canopy: 6.5" Round
Finishes: AB, ALB, BZ, PN
Glass Options: ALB, WG
Socket: E26 Keyless
Wattage: 15 LED A19
Weight: 8 Pounds
Note: 120V Configuration Only

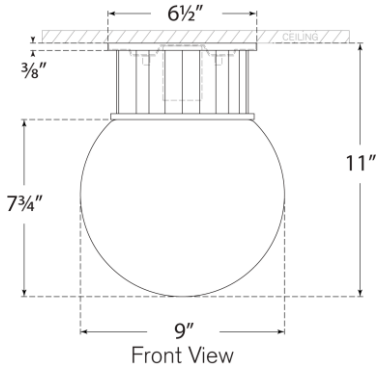

Front View

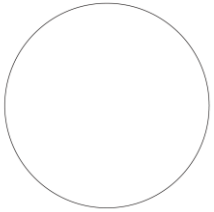
Bottom View

VISUAL COMFORT & CO.

DAMP LED 4