TEAR SHEET



Fluted Band 16" Semi-Flush Mount

Item # CHC 4070ALB

Designer: Chapman & Myers

Height: 16.75"

Width: 16"

Canopy: 5.25" Decorative

Finishes: ALB

Socket: 3 - E12 Candelabra

Wattage: 3 - 6.5 LED B11

Weight: 20 Pounds

Note: 120V Configuration Only | Alabaster is a Natural Stone | Variations in Color and Texture are Expected

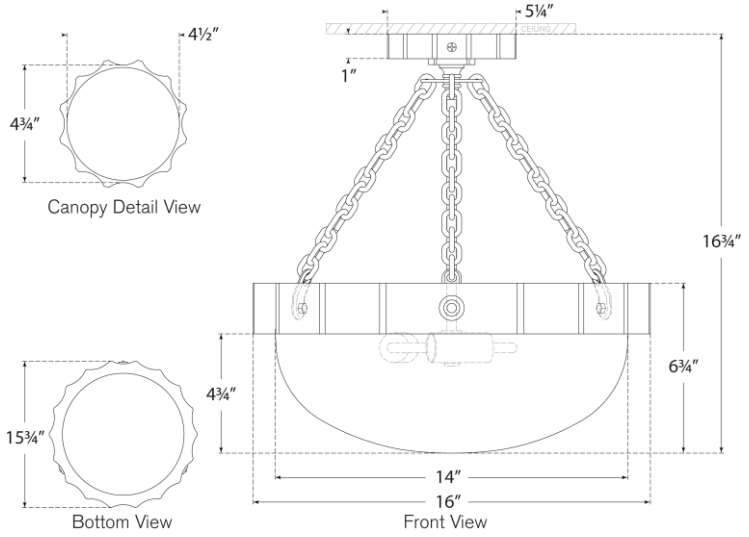

VISUAL COMFORT & CO.