TEAR SHEET

Martil 8" Flush Mount

Item # CHC 4130AB-WG

Designer: Chapman & Myers



Height: 8.75"
Width: 8"
Canopy: 4.75" Round
Finishes: AB, BZ, PN
Glass Options: WG
Socket: E26 Keyless
Wattage: 15 LED A19
Weight: 4 Pounds
Note: 120V Configuration Only

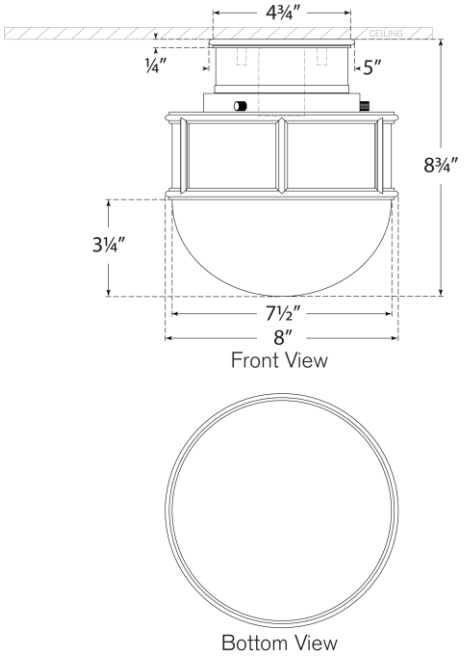

VISUAL COMFORT & CO.