TEAR SHEET

Stellar 40" Radial Semi-Flush Mount

Item # CHC 4607WHT

Designer: Chapman & Myers

Height: 7.75"
Width: 39"
Canopy: 6.25" Round
Finishes: BLK, G, PN, WHT
Trim Options: FA
Lightsource: Dedicated LED
Wattage: 45w (5400lm)
Weight: 13 Pounds



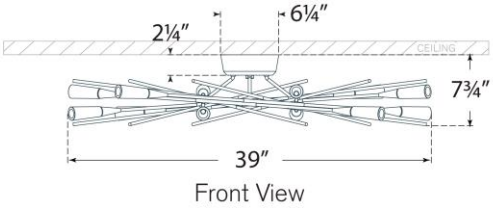

Front View

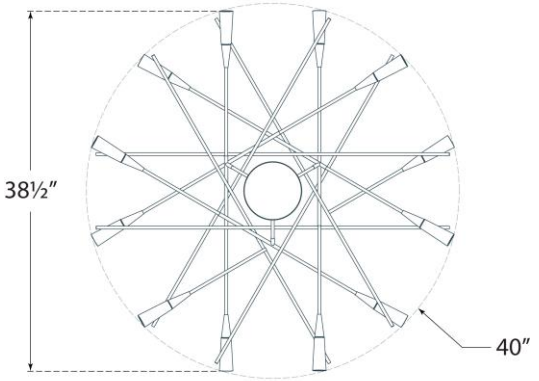

Top View

VISUAL COMFORT & CO.

DAMP LED 4