TEAR SHEET

Antigua 30" Chandelier

Item # CHC 5019PN/NAB

Designer: Chapman & Myers



Height: 15.5"
Width: 30"
Canopy: 6" Round
Finishes: AB/NAB, BZ/NAB, PN/NAB
Socket: 3 - E26 Keyless
Wattage: 3 - 15 LED A19
Weight: 25 Pounds
Note: 120V Configuration Only

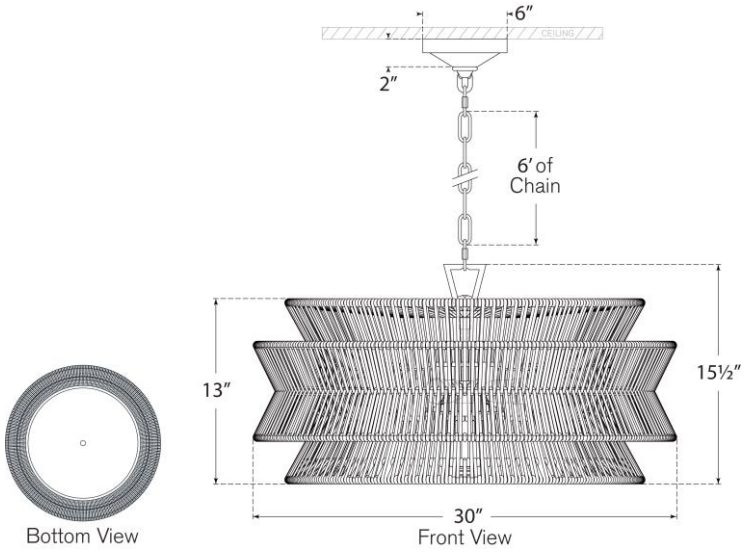

VISUAL COMFORT & CO.