TEAR SHEET

Quincy Small Sputnik Chandelier

Item # CHC 5286AB-CA

Designer: Chapman & Myers

Height: 20"
Width: 20"
Canopy: 5.75" Round
Finishes: AB, PN
Socket: 20 - E12 Candelabra
Wattage: 20 - 25 C11
Weight: 14 Pounds
©EFC DESIGNS



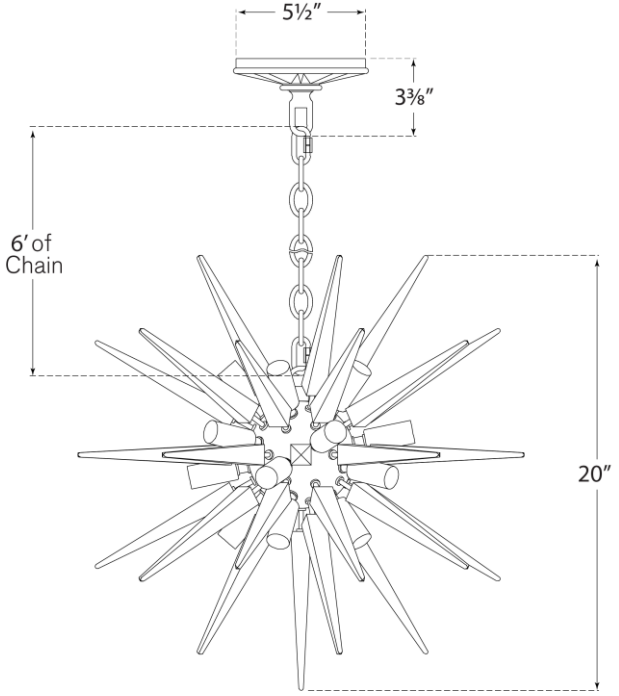

CHC5286

VISUAL COMFORT & CO.

DAMP 4