TEAR SHEET



Andros Medium Pendant

Item # CHC 5425AB-WG

Designer: Chapman & Myers

Height: 15.25"
Width: 8.5"
Canopy: 5" Round
Finishes: AB, PN
Glass Options: CG, SMG, WG
Socket: E26 Keyless
Wattage: 15 LED A19
Weight: 11 Pounds

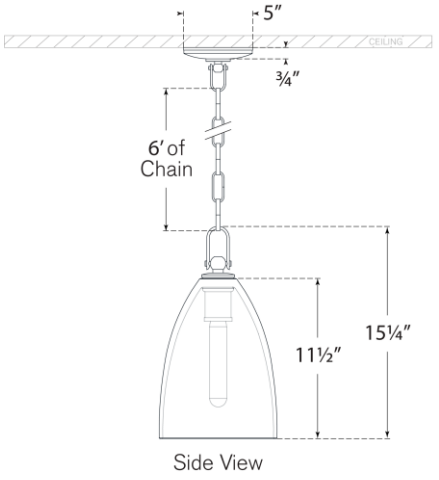

Side View

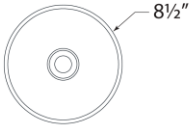

Bottom View

VISUAL COMFORT & CO.