TEAR SHEET

Lexie 14" Globe Lantern

Item # CHC 5515BZ

Designer: Chapman & Myers



Height: 17.5"
Width: 14"
Canopy: 5" Round
Finishes: AI, BZ
Socket: 4 - E12 Candelabra
Wattage: 4 - 6.5 LED B11
Weight: 9 Pounds

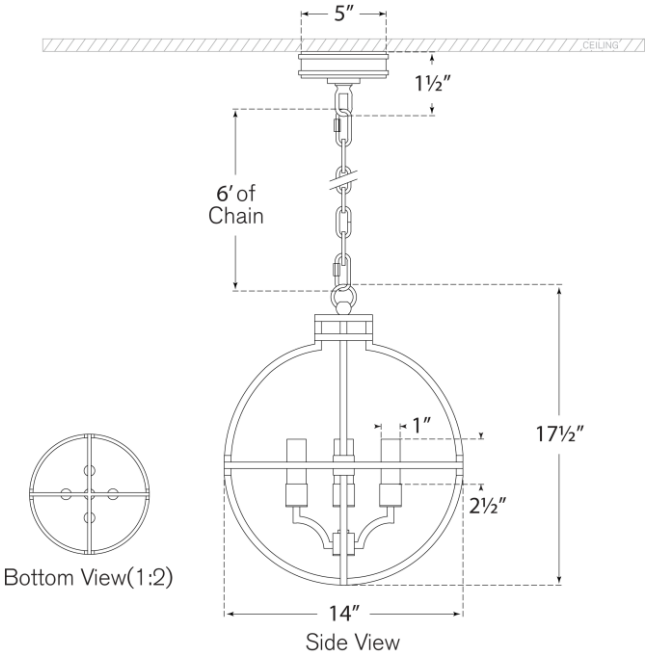

VISUAL COMFORT & CO.

DAMP LED 4