TEAR SHEET

Clovis Grande Chandelier

Item # CHC 5639AB/NTW

Designer: Chapman & Myers



Height: 86.75"

Width: 60"

Canopy: 8" Round

Finishes: AB/NTW, AI/NTW

Socket: 6 - E26 Keyless

Wattage: 6 - 15 LED A19

Weight: 49 Pounds

Note: Minimum Installable Height: 60"

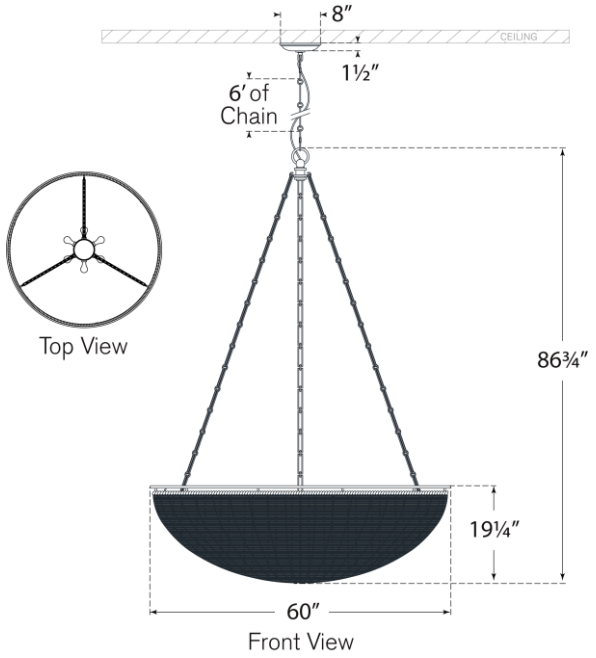

VISUAL COMFORT & CO.