TEAR SHEET



Amalfi 57" Linear Chandelier

Item # CHC 5680WBK-L

Designer: Chapman & Myers

Height: 32.25"
Width: 9" x 57"
Canopy: 6" Round
Finishes: MGO, PW, WBK
Shade Treatments: L
Shade Details: 4.5" x 9" x 6.5"
Socket: 2 - E12 Candelabra
Wattage: 2 - 6.5 LED B11
Weight: 9 Pounds
Note: 120V Configuration Only

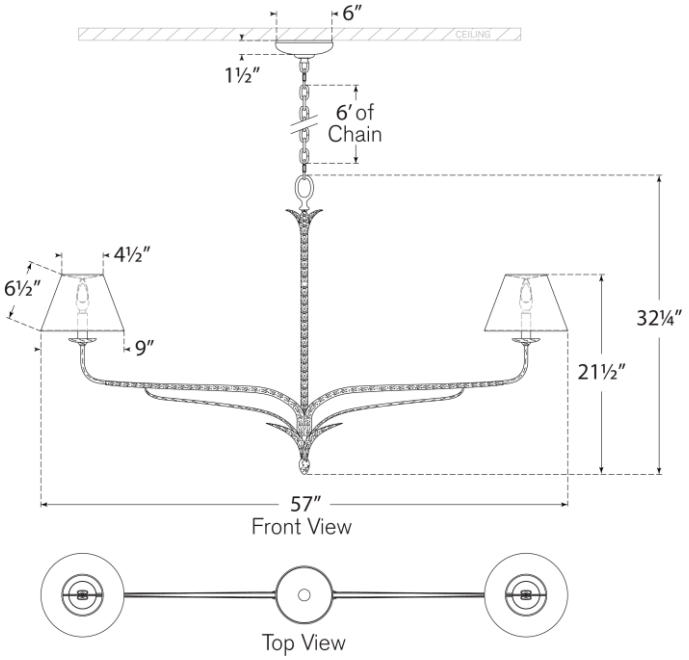

VISUAL COMFORT & CO.