TEAR SHEET



Basden 29" Tail Sconce

Item # CHD 2085AB/NRT-L

Designer: Chapman & Myers

Height: 28.5"

Width: 6"

Extension: 6.75"

Backplate: 2.75" x 4.5" Rectangle

Finishes: AB/NRT, PN/BRT

Shade Treatments: L

Shade Details: 4" x 6" x 7"

Socket: E12 Candelabra

Wattage: 6.5 LED B11

Weight: 3 Pounds

Note: Requires Smaller Outlet Box | Rattan is a natural material | Variations in color tones are expected

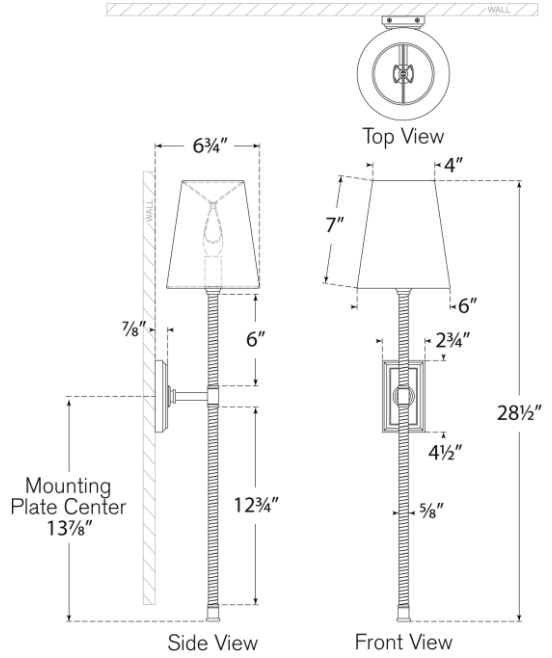

VISUAL COMFORT & CO.