TEAR SHEET

Cornado 18" Indoor/Outdoor Hurricane Sconce

Item # CHD 2116MBR-EC

Designer: Chapman & Myers



Height: 18"
Width: 5.25"
Extension: 5.75"
Backplate: 5.25" x 18" Rectangle
Finishes: MBR, MPN
Glass Options: EC
Lightsource: Dedicated LED
Wattage: 15w (1800lm)
Weight: 17 Pounds
Note: Fixture Can be Installed Inverted

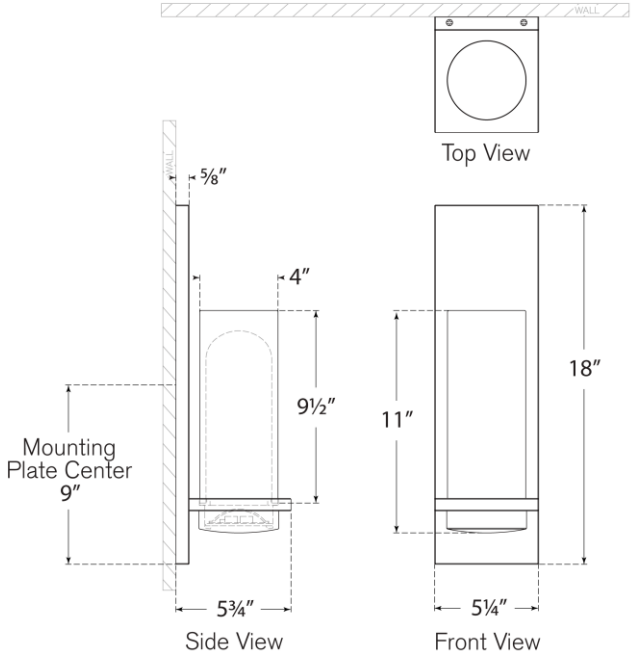

VISUAL COMFORT & CO.

WET LED 4