TEAR SHEET

Provo 10" Canister Light

Item # CHD 2231BZ

Designer: Chapman & Myers

Height: 9.5"
Width: 4.5"
Extension: 5.75"
Backplate: 4.5" Square
Finishes: AB, BLK, BZ, PN
Lightsource: Dedicated LED
Wattage: 9w (1000lm)
Weight: 7 Pounds



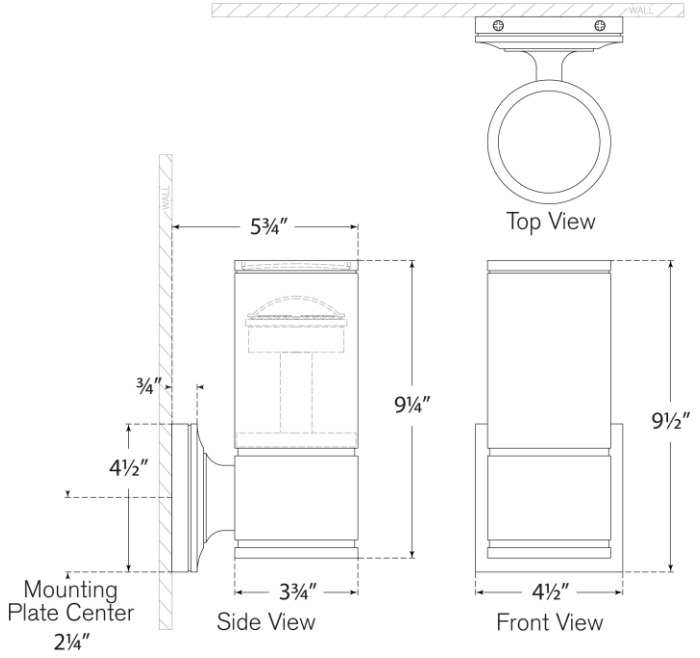

VISUAL COMFORT & CO.