TEAR SHEET



Provo 20" Canister Light

Item # CHD 2234BLK

Designer: Chapman & Myers

Height: 20"
Width: 4.5"
Extension: 5.75"
Backplate: 4.5" x 5.75" Rectangle
Finishes: BLK, BZ, PN
Lightsource: Dedicated LED
Wattage: 18w (2100lm)
Weight: 9 Pounds

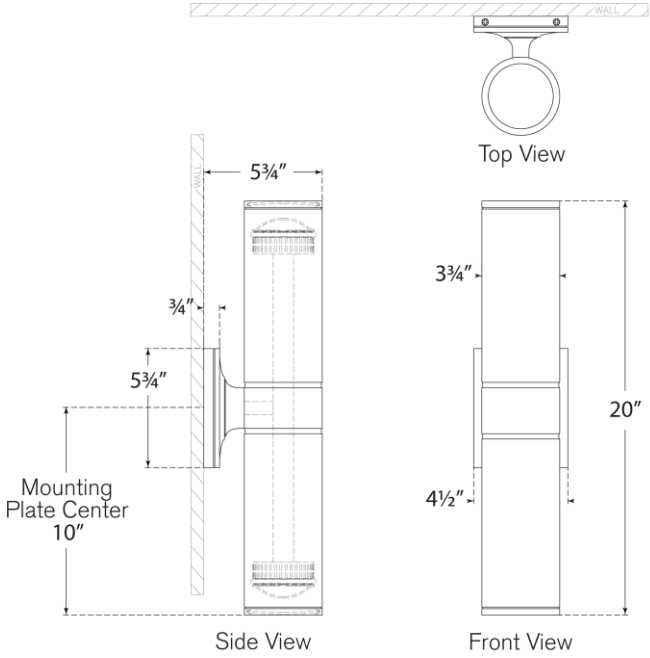

VISUAL COMFORT & CO.

WET LED 4