TEAR SHEET

Madden 13" Fluted Linear Sconce

Item # CHD 2320ALB/PN

Designer: Chapman & Myers

Height: 12.5"

Width: 4.25"

Extension: 2.75"

Backplate: 2.75" x 11.25" Rectangle

Finishes: ALB/AB, ALB/PN

Lightsource: Dedicated LED

Wattage: 15w (2100lm)

Weight: 7 Pounds

Note: Alabaster is a Natural Stone | Variations in Color and Texture ar
Expected | Requires Smaller Outlet Box



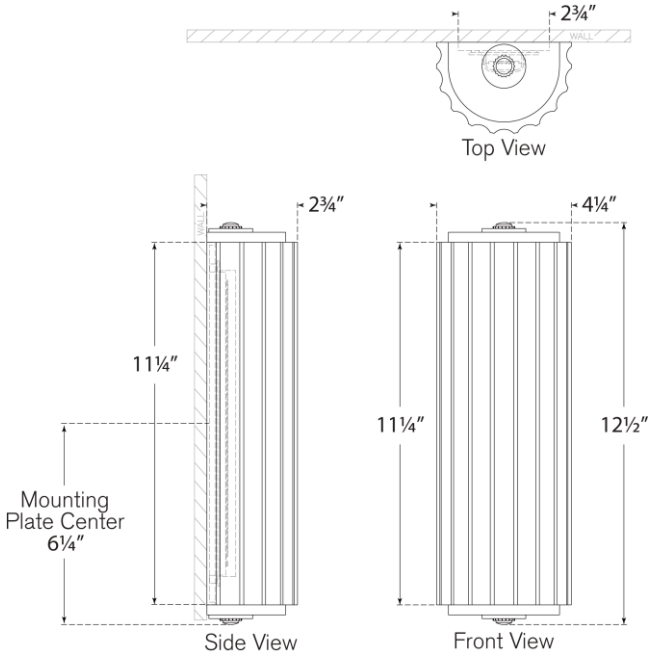

VISUAL COMFORT & CO.

DAMP LED 4