TEAR SHEET

Covington Sconce
Item # CHD 2474AN-CG

Designer: Chapman & Myers

Height: 10.5"
Width: 4.5"
Extension: 6"
Backplate: 4.5" x 5" Rectangle
Finishes: AB, AN, BZ, PN
Glass Options: CG
Socket: E26 Keyless
Wattage: 60 T10
Weight: 5 Pounds
©EFC DESIGNS



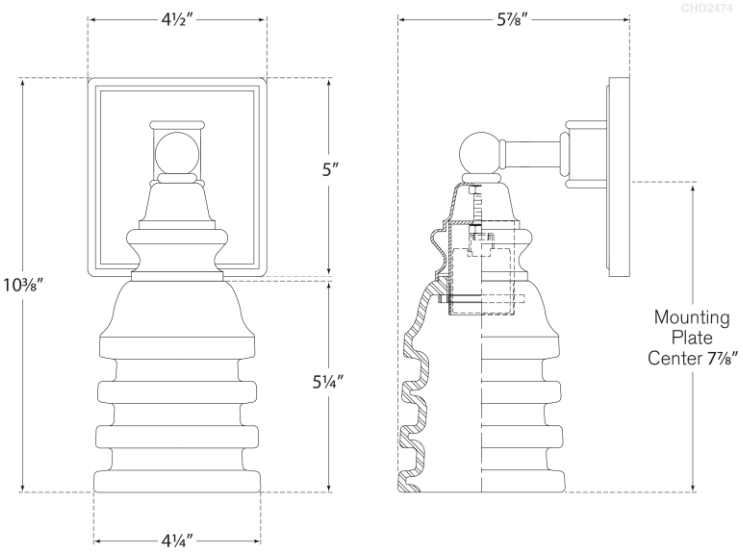

VISUAL COMFORT & CO.