TEAR SHEET



Ring Form Large Wall Sconce

Item # CHD 2970ALB-L

Designer: Chapman & Myers

Height: 19"

Width: 13.5"

Extension: 7"

Backplate: 4.25" x 6.5" Rectangle

Finishes: ALB, BZ

Shade Treatments: L

Shade Details: 10.5" x 13.5" x 8.5" Rectangle

Socket: E26 Hi-Lo

Wattage: 75 A19

Weight: 6 Pounds

Note: Alabaster is a Natural Stone | Variations in Color and Texture ar
Expected

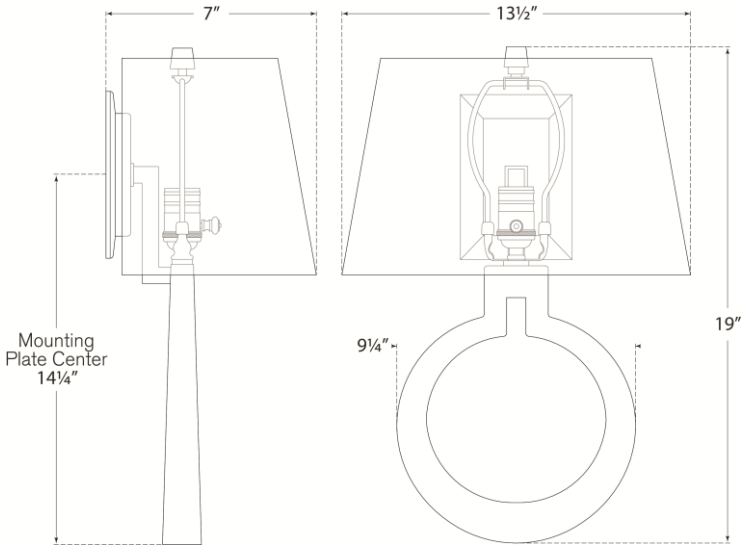

VISUAL COMFORT & CO.

DRY

4