TEAR SHEET

Larkin Medium Conical Bracketed Sconce

Item # IKF 2450BZ-CG

Designer: Ian K. Fowler



Height: 17.75"
Width: 5.5"
Extension: 7"
Backplate: 5.25" Round
Finishes: BZ
Glass Options: CG
Lightsource: Dedicated LED
Wattage: 10w (1200lm)
Weight: 6 Pounds

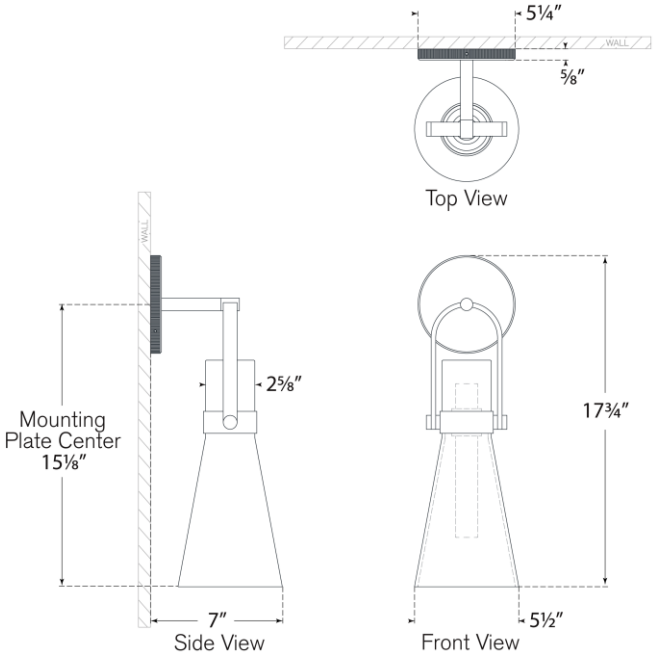

VISUAL COMFORT & CO.

DAMP LED 4