TEAR SHEET



Ellora 28" Table Lamp

Item # IKF 3600POM-L

Designer: Ian K. Fowler

Height: 28"

Width: 19.5"

Base: 5.5" Round

Finishes: CSH, MBB, POM

Shade Treatments: L

Shade Details: 13.5" x 19.5" x 11.25"

Socket: E26 Dimmer

Wattage: 15 LED A19

Weight: 12 Pounds

Note: 120V Configuration Only | Reactive Ceramic Glazes Will Vary ir Color and Texture

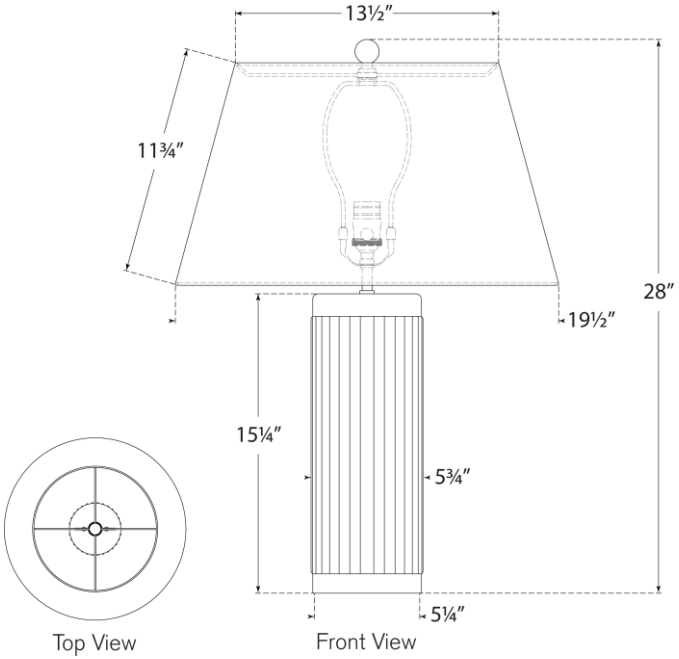

VISUAL COMFORT & CO.