TEAR SHEET

Vesse 28" Table Lamp

Item # IKF 3615POM-L

Designer: Ian K. Fowler



Height: 28.5"
Width: 21.25"
Base: 9.5" Round
Finishes: CSH, MBB, POM
Shade Treatments: L
Shade Details: 21.25" x 21.25" x 12.75"
Socket: E26 Dimmer
Wattage: 15 LED A19
Weight: 23 Pounds
Note: Reactive Ceramic Glazes Will Vary in Color and Texture

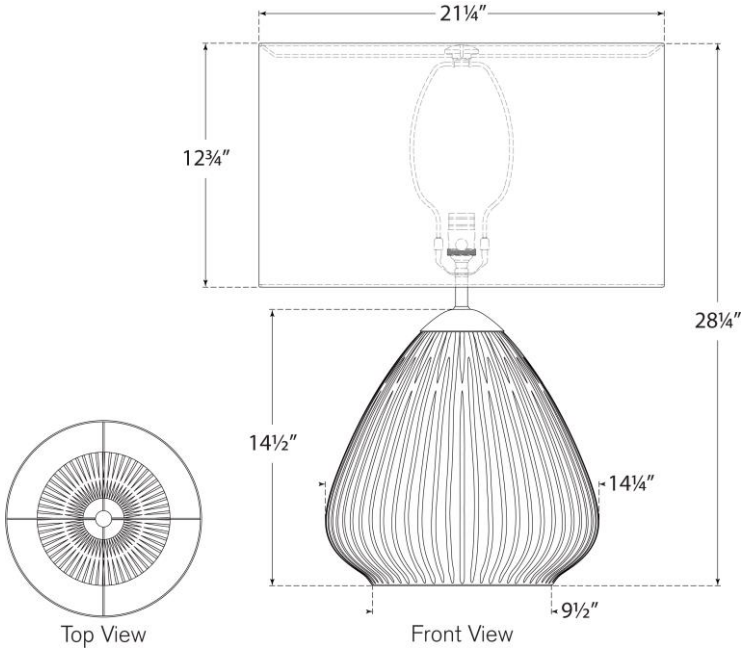

VISUAL COMFORT & CO.