TEAR SHEET

Mafra Large Chandelier

Item # IKF 5360HAB-WG



Designer: Ian K. Fowler

O/A Height: 28" - 125"
Fixture Height: 11.5"
Width: 36"
Canopy: 6" Round
Finishes: HAB, PN
Glass Options: WG
Lightsource: Dedicated LED
Wattage: 65w (5200lm)
Weight: 26 Pounds
Note: Height Not Adjustable After Installation

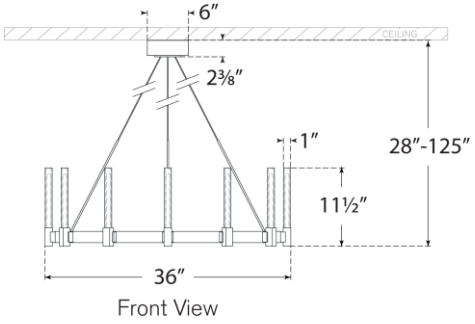

Front View

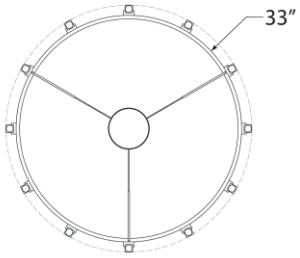

Top View

VISUAL COMFORT & CO.

DAMP LED 4