TEAR SHEET



Iberia Double Right Sconce

Item # JN 2077BSL-L

Designer: Julie Neill

Height: 24"
Width: 11"
Extension: 6.5"
Backplate: 2.75" x 4.25" Rectangle
Finishes: ABL, AGL, PW
Shade Treatments: L
Shade Details: 3" x 4.5" x 8.25"
Socket: 2 - E12 Candelabra
Wattage: 2 - 25 B11
Weight: 3 Pounds
Note: Requires Smaller Outlet Box

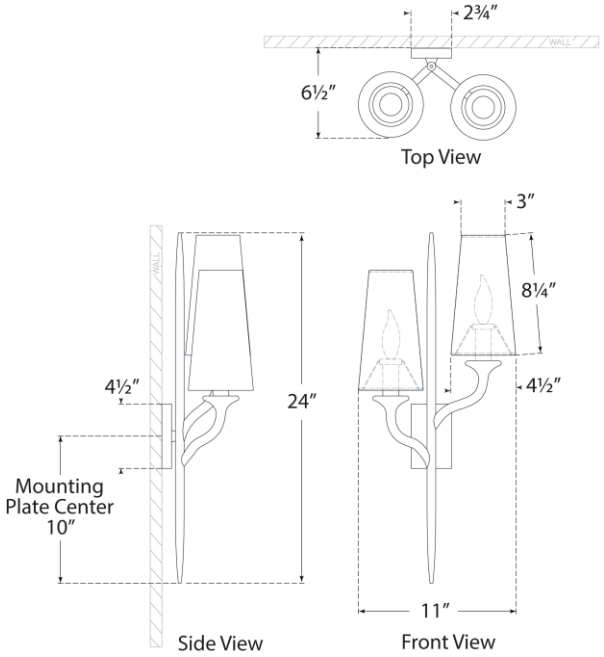

VISUAL COMFORT & CO.