TEAR SHEET

Lorio Large Chandelier

Item # JN 5175AI

Designer: Julie Neill

Height: 37.25"
Width: 33"
Canopy: 5.5" Round
Finishes: AI, PW
Socket: 12 - E12 Candelabra
Wattage: 12 - 6.5 LED B11
Weight: 20 Pounds



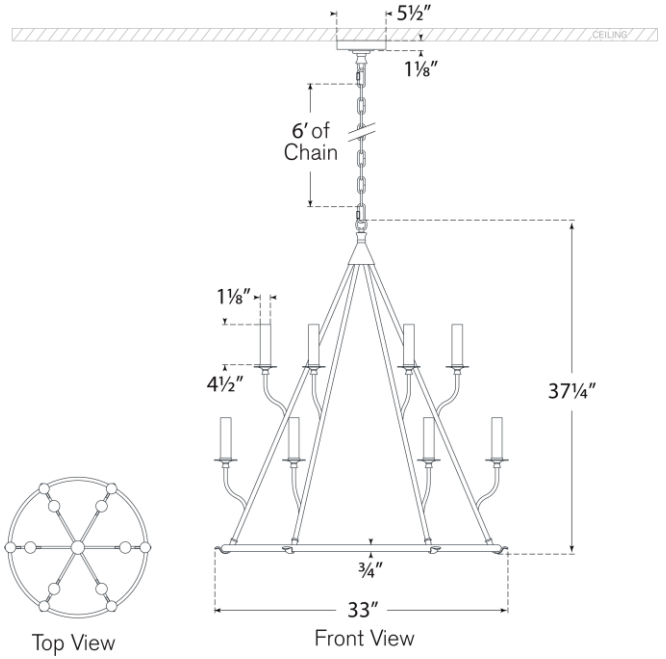

VISUAL COMFORT & CO.