TEAR SHEET

Milazzo Medium Waterfall Chandelier

Item # JN 5234BSL/CG

Designer: Julie Neill



Height: 26.5"
Width: 28.5"
Canopy: 5.25" Hexagon
Finishes: BSL/CG
Socket: 8 - E12 Candelabra
Wattage: 8 - 40 C11
Weight: 78 Pounds

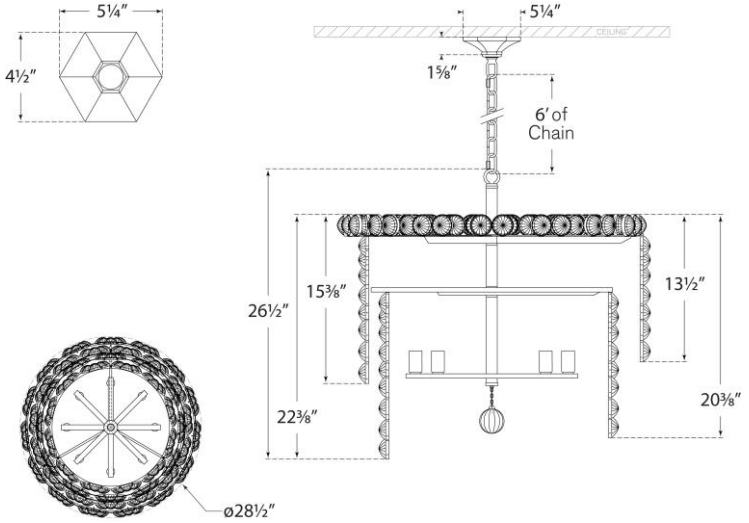

VISUAL COMFORT & CO.