TEAR SHEET

Alberto Large Open Cage Lantern

Item # JN 5303AB

Designer: Julie Neill



Height: 39"
Width: 24"
Canopy: 5.5" Round
Finishes: AB, ABL, AGL, PW
Socket: 4 - E12 Candelabra
Wattage: 4 - 5.5 LED G16.5
Weight: 20 Pounds

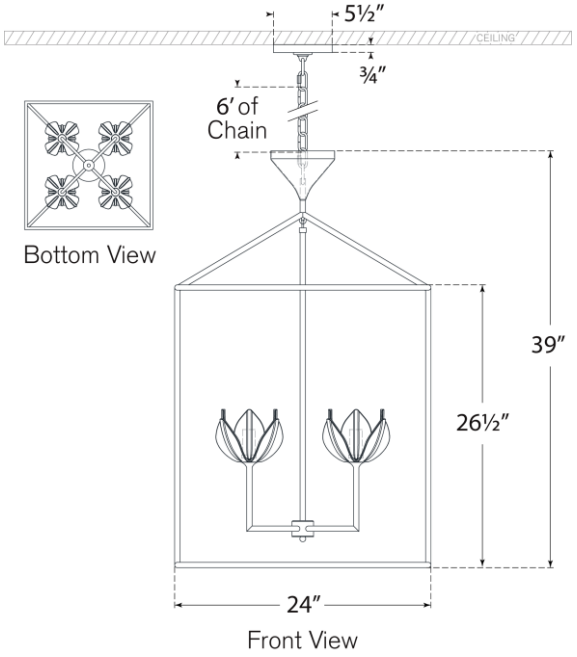

VISUAL COMFORT & CO.