TEAR SHEET

Alberto Grande Open Cage Lantern

Item # JN 5305AB

Designer: Julie Neill



Height: 59"
Width: 38"
Canopy: 5.5" Round
Finishes: AB, ABL, PW
Socket: 6 - E12 Candelabra
Wattage: 6 - 5.5 LED G16.5
Weight: 45 Pounds

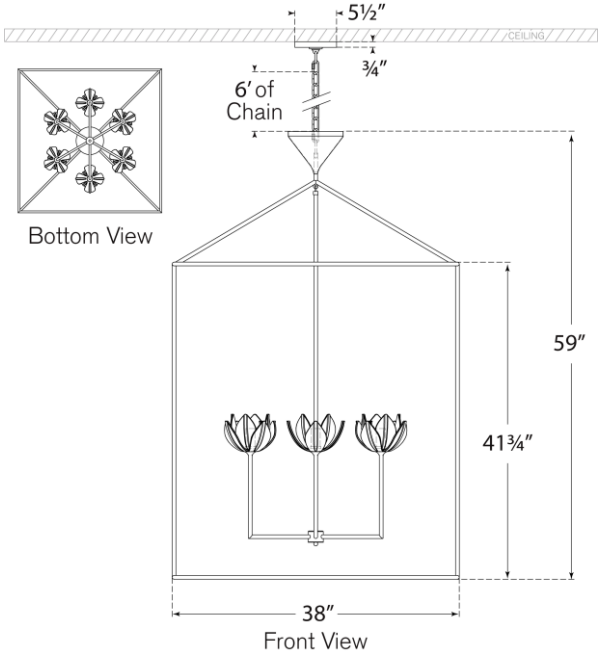

VISUAL COMFORT & CO.