TEAR SHEET



Lotura 72" Intersecting Floor Lamp

Item # KW 1440MBL

Designer: Kelly Wearstler

Height: 72"
Width: 18.5"
Base: 13" x 16" Decorative
Finishes: MBL, MGD, MWH
Lightsource: Dedicated LED w/ Touch Dimmer on Body
Wattage: 15w (1800lm)
Weight: 82 Pounds

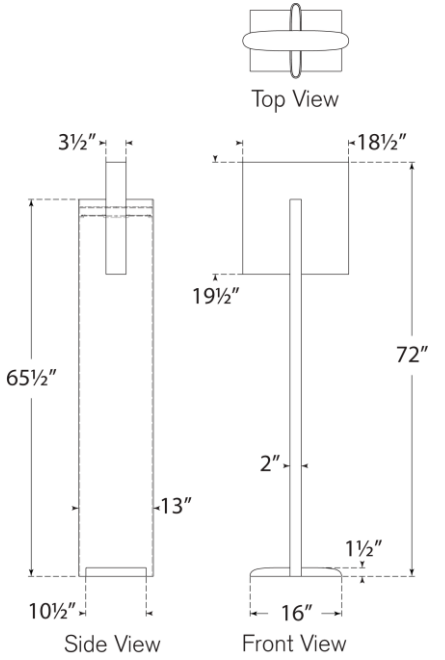

VISUAL COMFORT & CO.