TEAR SHEET

Precision 12" Articulating Sconce

Item # KW 2067AB-WG

Designer: Kelly Wearstler



Height: 9" - 11.5"
Width: 4.5"
Extension: 6.75" - 11.75"
Backplate: 4.5" Round
Finishes: AB, BZ, PN
Glass Options: WG
Lightsource: Dedicated LED
Wattage: 8w (1200lm)
Weight: 4 Pounds

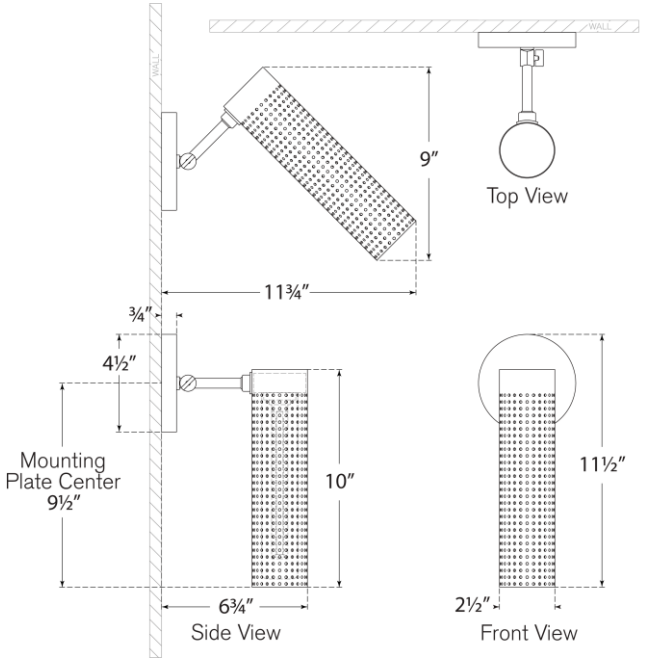

VISUAL COMFORT & CO.

DAMP LED 4