TEAR SHEET



Dichotomy 5" Sconce

Item # KW 2140AB-ALB

Designer: Kelly Wearstler

Height: 4.5"

Width: 4.5"

Extension: 0.75"

Backplate: 4.5" Square

Finishes: AB, BZ, PWT

Trim Options: ALB

Lightsource: Dedicated LED

Wattage: 6w (800lm)

Weight: 2 Pounds

Note: Alabaster is a Natural Stone | Variations in Color and Texture ar
Expected

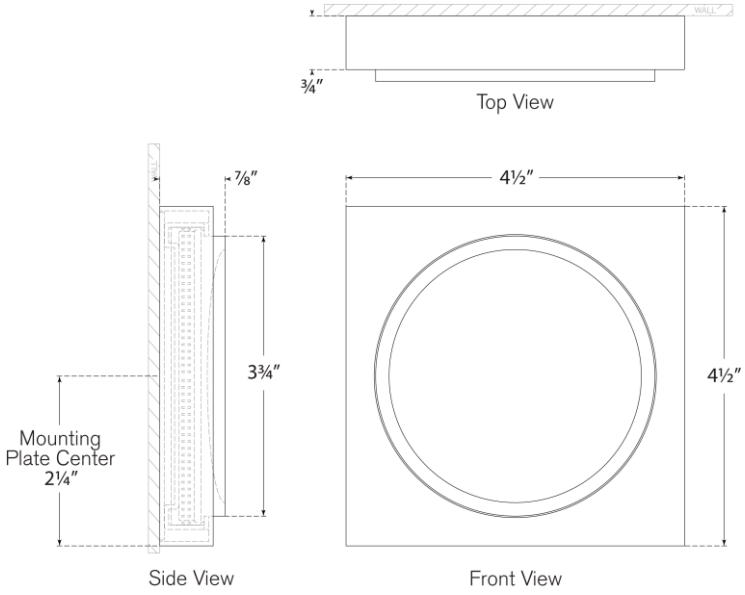

VISUAL COMFORT & CO.

DAMP LED 3