TEAR SHEET



Dichotomy 18" 4 Light Sconce

Item # KW 2145AB-ALB

Designer: Kelly Wearstler

Height: 18"

Width: 4.5"

Extension: 0.75"

Backplate: 4.5" x 18" Rectangle

Finishes: AB, BZ, PWT

Trim Options: ALB

Lightsource: Dedicated LED

Wattage: 15w (2100lm)

Weight: 6 Pounds

Note: Alabaster is a Natural Stone | Variations in Color and Texture ar
Expected

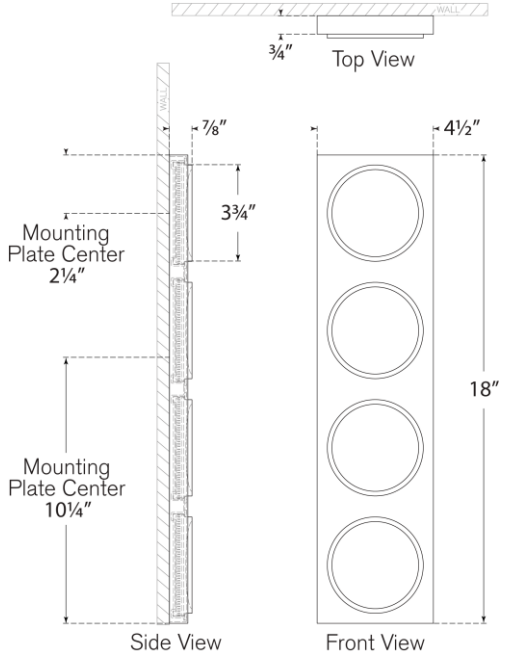

VISUAL COMFORT & CO.

DAMP LED 3