TEAR SHEET



Dichotomy 27" 6 Light Sconce

Item # KW 2146AB-ALB

Designer: Kelly Wearstler

Height: 27"

Width: 4.5"

Extension: 0.75"

Backplate: 4.5" x 27" Rectangle

Finishes: AB, BZ, PWT

Trim Options: ALB

Lightsource: Dedicated LED

Wattage: 23w (3200lm)

Weight: 9 Pounds

Note: Alabaster is a Natural Stone | Variations in Color and Texture ar
Expected

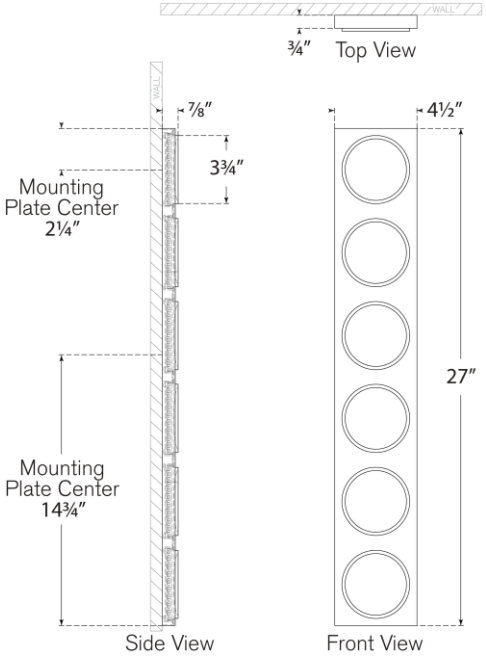

VISUAL COMFORT & CO.