TEAR SHEET

Verso Single Sconce

Item # KW 2745PN-CG

Designer: Kelly Wearstler



Height: 16.75"
Width: 5"
Extension: 5.5"
Backplate: 4.5" x 5.5" Oval
Finishes: PN
Glass Options: CG
Lightsource: Dedicated LED
Wattage: 6w (500lm)
Weight: 7 Pounds

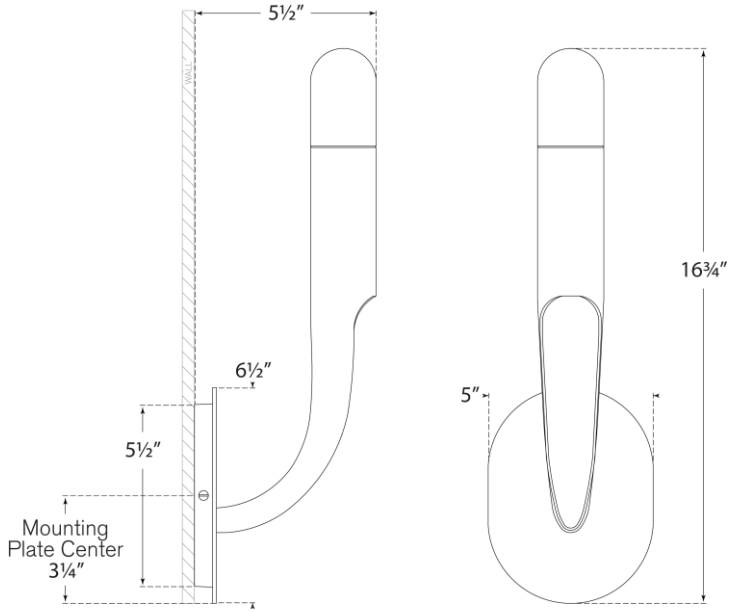

VISUAL COMFORT & CO.

DAMP LED 4