TEAR SHEET

Precision Accent Table Lantern

Item # KW 3224BZ-WG

Designer: Kelly Wearstler



Height: 10.5"
Width: 10"
Base: 5.25" Round
Finishes: BZ, PN
Glass Options: WG
Socket: E26 Keyless w/ Dimmer On Body
Wattage: 15 LED A19
Weight: 7 Pounds

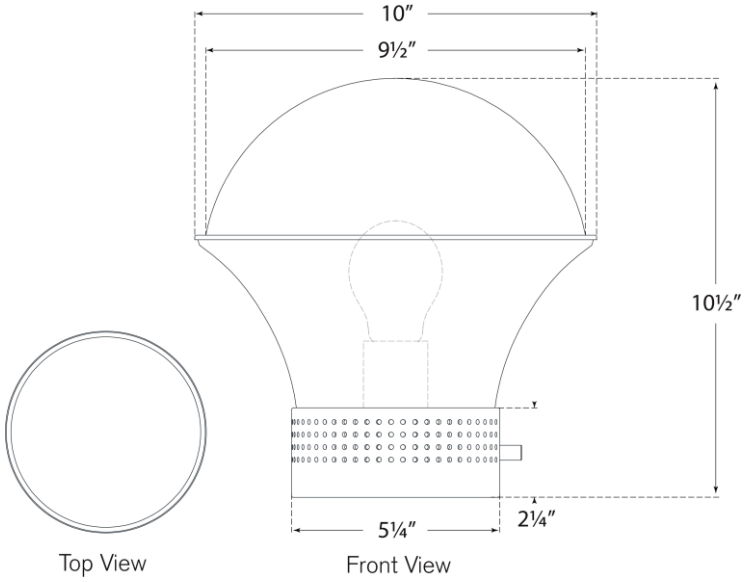

VISUAL COMFORT & CO.