TEAR SHEET



Rousseau 20" Table Lamp

Item # KW 3280AB-EC

Designer: Kelly Wearstler

Height: 20.25"
Width: 6"
Base: 6" Round
Finishes: AB, BZ, PN
Glass Options: EC
Lightsource: Dedicated LED w/ Touch Dimmer on Body
Wattage: 6w (150 - 700lm)
Weight: 5 Pounds

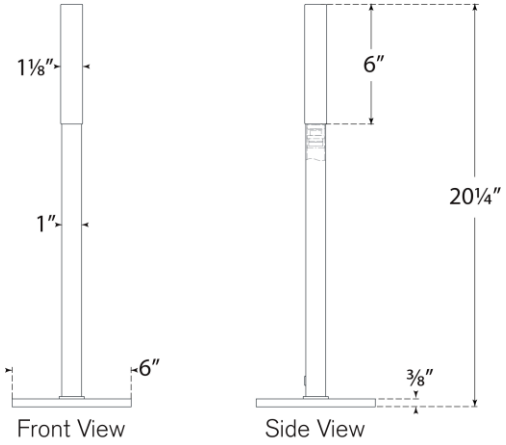


Top View

VISUAL COMFORT & CO.