TEAR SHEET



Beton Medium Table Lamp

Item # KW 3613SBM-L

Designer: Kelly Wearstler

Height: 28.25"
Width: 18.5"
Base: 5" x 10.25" Oval
Finishes: AWC, CBZ, SBM
Shade Treatments: L
Shade Details: 16" x 18.5" x 12.5" Oval
Socket: E26 Dimmer
Wattage: 15 LED A19
Weight: 17 Pounds
Note: Reactive Ceramic Glazes Will Vary in Color and Texture

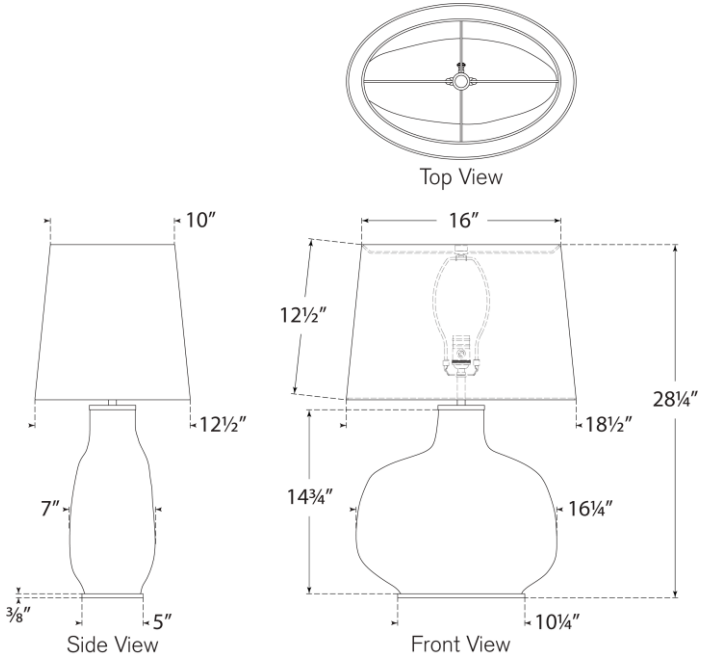

VISUAL COMFORT & CO.