TEAR SHEET

Blique 12" Rechargeable Accent Lamp

Item # KW 3635MNW-EG



Designer: Kelly Wearstler

Height: 12"

Width: 18.25"

Base: 6" Round

Finishes: MNW, NCT, PCK

Glass Options: EG

Lightsource: Rechargeable LED w/ Touch Dimmer at Back of Body

Wattage: 4w (150 - 600lm)

Weight: 16 Pounds

Note: 120V Configuration Only | Battery Operated | Charging Cable Included | Reactive Ceramic Glazes Will Vary in Color and Texture

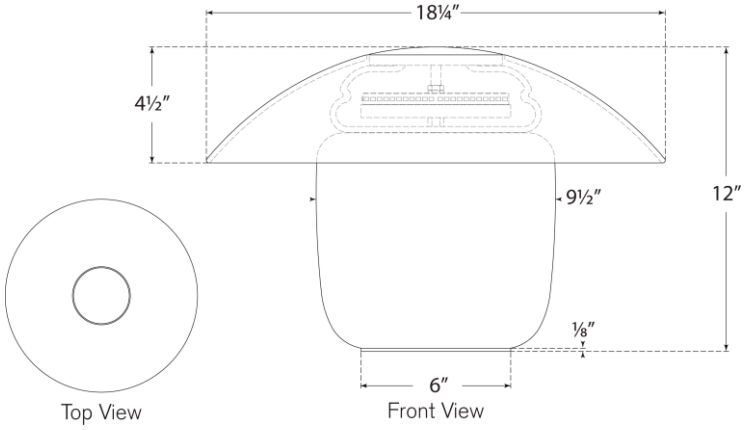

VISUAL COMFORT & CO.

DAMP LED