TEAR SHEET

Pari Small Square Table Lamp

Item # KW 3676CLB-L

Designer: Kelly Wearstler



Height: 17.75"
Width: 11.5"
Base: 8" Square
Finishes: CLB, IVO, SBM
Shade Treatments: L
Shade Details: 11.5" x 11.5" x 11.5"
Socket: E26 Keyless w/ Line Switch
Wattage: 75 A19
Weight: 10 Pounds
Note: Reactive Ceramic Glazes Will Vary in Color and Texture

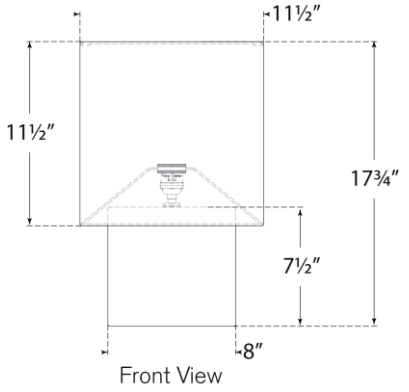

Front View

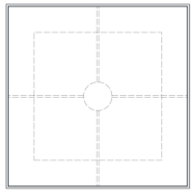
Top View

VISUAL COMFORT & CO.